Panasonic

5000, 5001

CONTROL AND INDICATING EQUIPMENT EBL512 G3

Fire alarm solutions 5000S serie technical description

www.panasonic-fire-security.com

Table of Contents

1. INTRODUCTION 4
2. ABBREVIATIONS 5
3. SAFETY INSTRUCTIONS 6
3.1. PERSONS 6
3.1.1. ORDINARY PERSON 6
3.1.2. INSTRUCTED PERSON 6
3.1.3. SKILLED PERSON 6
3.2. WARNINGS 7
4. GENERAL DESCRIPTION 8
4.1. OPTIONS 8
4.2. FIRE BRIGADE PANEL 9
4.3. CONTROL PANEL 10
4.4. MAIN BOARD 11
4.4.1. COM LOOP BOARD 5017 12
4.5. MMI BOARD 12
4.6. CIE FRONT DOOR 13
4.7. CIE METAL HOUSING 14
4.8. PRINTER 15
5. CONNECTIONS IN THE CIE 16
5.1. COM LOOPS 17
5.2. PROGRAMMABLE VOLTAGE OUTPUTS (S0-S3) 18
5.3. PROGRAMMABLE RELAY OUTPUTS (R0-R1) 18
5.4. PROGRAMMABLE INPUTS (I0-I3) 18
5.5. RELAY OUTPUTS FOR ROUTING EQUIPMENT (TX) 20
5.5.1. FIRE ALARM OUTPUT 20
5.5.2. FAULT CONDITION OUTPUT 20
5.6. NETWORK 20
5.7. POWER SUPPLY 24 V FOR DISPLAY UNITS 20
5.8. DISPLAY UNITS – RS485 20
5.9. POWER SUPPLY 24 V FOR DISPLAY UNIT REDUNDANT 20
5.10. POWER SUPPLY 24 V FOR ROUTING EQUIPMENT 20
5.11. POWER SUPPLY 1 20
5.12. POWER SUPPLY 2-4 21
6. MOUNTING 22
6.1. WALL MOUNTING PLATE 22
6.2. MOUNTING PLATE FOR 19” MOUNTING RACK, 5020 23
6.3. MOUNTING PLATE FOR INFLAMMABLE WALL, 5021 24
7. INSTALLATION AND WIRING 25
7.1. WIRING OUTSIDE THE BUILDING 26
7.2. DISCONNECT DEVICE 26
7.3. NETWORK AND DISPLAY UNITS 26

7.4. POWER SUPPLY 27
7.5. NETWORK BOARD 5040 27
7.6. BATTERIES 29
7.7. INTERNAL CONNECTIONS 29
7.8. EXAMPLE OF COM LOOP WIRING 30
7.9. PROTECTIVE EARTHING 31
8. MAINTENANCE 32
8.1. PCB REPLACEMENT 32
8.1.1. REPLACEMENT OF THE MMI BOARD 32
8.1.2. REPLACEMENT OF THE MAIN BOARD 32
8.1.3. TLON CONNECTION BOARD 32
9. TROUBLESHOOTING 33
9.1. EARTH FAULT 33
10. TECHNICAL DATA 5000 34
11. TECHNICAL DATA 5001 35
12. APPENDIX 36
12.1. MAIN BOARD J3 36
12.2. MAIN BOARD J4 37
12.2.1. J4:21-40 37
12.2.2. EN54-13 COMPLIANCE 39
12.2.3. NON COMPLIANCE 40
12.3. MAIN BOARD J5 41
12.4. MAIN BOARD J9 42
12.5. MAIN BOARD INTERNAL CONNECTION 43
12.6. 5040 PRIMARY AND SECONDARY NETWORK 44
13. APPROVALS 45

1. INTRODUCTION

This document describes the control and indicating equipment 5000S series, type number 5000 and 5001.
The document contains information about the product and instructions on how to mount and connect it.

5000S series

The 5000S series (5000S/5000SPRT/5001S), is an EBL512 G3 control unit with main board 5012 and MMI board 5015.

Article no	Product name
5000S	EBL512 G3 CU 5000
5000SPRT	EBL512 G3 CU 5000 w. printer
5001S	EBL512 G3 Control Unit 5001
5012	Main board
5015	MMI board
5017	COM loop board

2. ABBREVIATIONS

CIE	Control and indicating equipment (control unit)
Dwg	Drawing
LED	Light Emitting Diode
LPS	Limited Power Source (The output has maximum effect below 100W)

3. SAFETY INSTRUCTIONS

This chapter describes precautions that must be followed to reduce the likelihood of pain, injury and, in the case of fire, property damage.

3.1. PERSONS

3.1.1. ORDINARY PERSON

An ordinary person – as not instructed or skilled – may have access to the location of this equipment.
An ordinary person must not have access to open the door of the CIE with a key.
This equipment is not suitable for use in locations where children are likely to be present.

3.1.2. INSTRUCTED PERSON

An instructed person - a person who have been instructed and trained by a skilled person, or who are supervised by a skilled person.
An instructed person may open the door of the CIE with a key and may have access to the buttons on the front of the CIE,
An instructed person must not dismount the cover of the CIE.

National regulations must be followed.

3.1.3. SKILLED PERSON

A skilled person has the training and experience in the equipment technology, particularly in knowing the various energies and energy magnitudes in the equipment. Skilled persons are expected to use their training to take action for protection from injury from those energies.
Only a skilled person may have access to the CIE when the cover is dismounted.
Only a skilled person may connect and deploy the CIE.

National regulations must be followed.

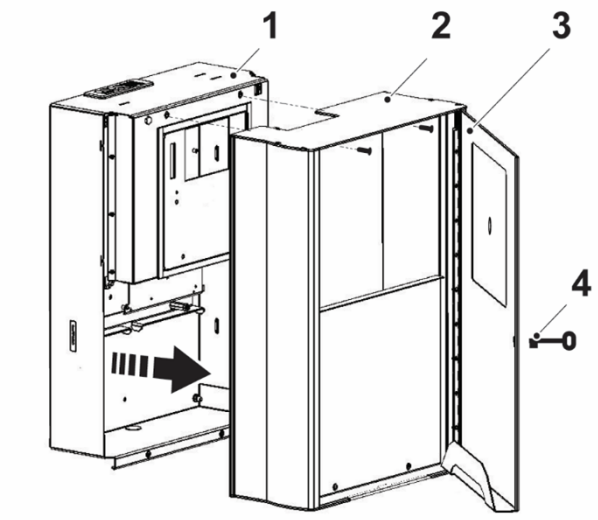

1. CIE
2. Cover
3. Door
4. Key

3.2. WARNINGS

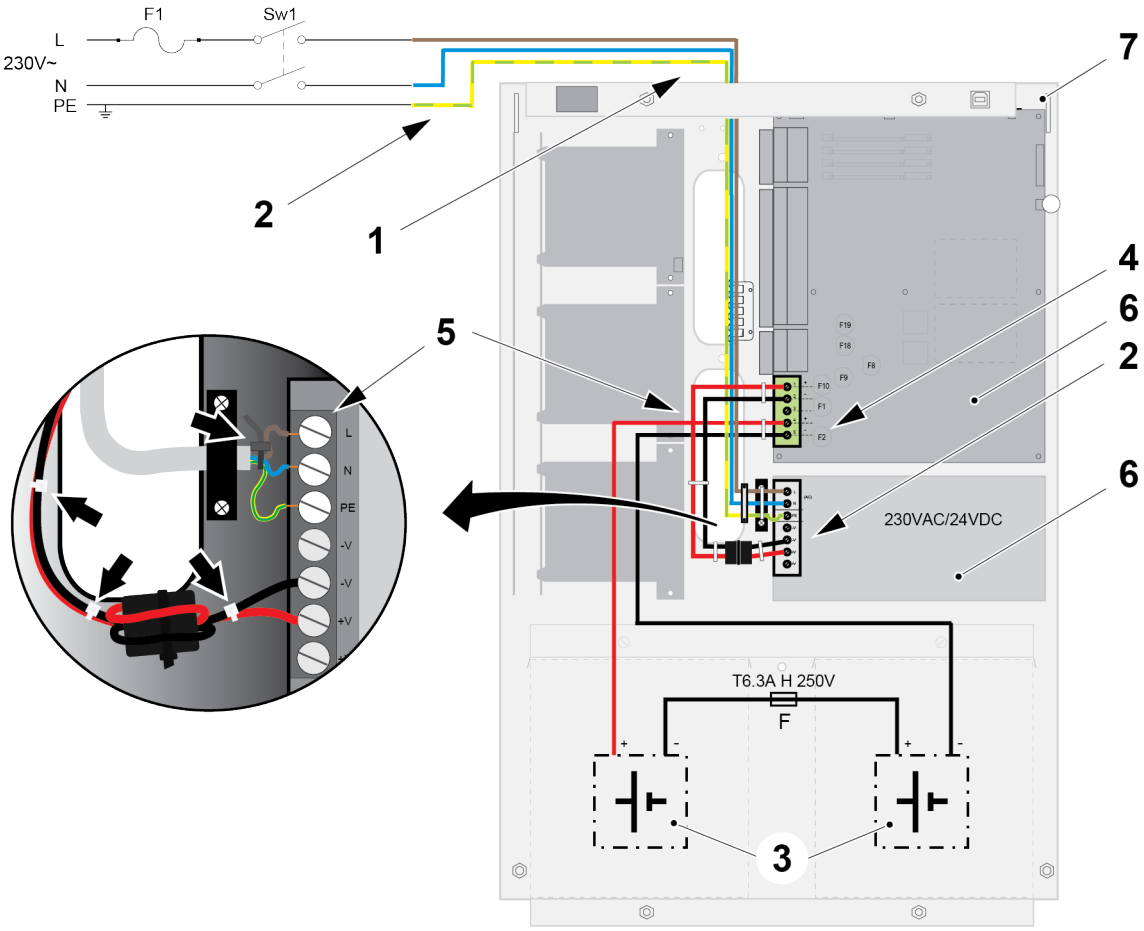

Element	Description	Markings / Instructions
1	Caution! Risk of electric shock. Dangerous voltage. Make sure to disconnect the equipment from the mains power supply before opening the housing of CIE 5000/5001.	
2	Note! Protective earth (ground). Make sure to connect the protective earth conductor when installing the CIE 5000/5001.	
3	Caution! Risk of explosion if batteries are replaced by incorrect type. See 7.6. BATTERIES on page 29.	
4	Caution! Risk of electric shock. Make sure to disconnect the fuse F2 for the backup batteries before touching anything in the CIE 5000/5001.	
5	Caution! Risk of electric shock. Long cable cores should be safely secured, not to touch high/low voltage parts if becoming loose from its terminal. For example; secure with a cable tie.	
6	Caution! Hot parts! Risk of burned fingers when touching hot electrical components. Do not touch any electrical components when the unit is powered.	
7	Caution! Sharp edges! Risk of cuts on fingers when touching edges inside the CIE.	

4. GENERAL DESCRIPTION

The control and indicating equipment is a unit, to which the alarm points are connected via the COM loops or zone line inputs. It indicates fire alarm, fault condition, and so on. Depending on country, convention, and configuration, the look, language, and functions might vary. It can be configured for 128, 256 or 512 alarm points, and the number of alarm points can be upgraded on site. In total, 1012 COM loop units (addresses) can be used; of which 512 can be alarm points.
The unit is intended for indoor use and in dry premises.

The EBL512 G3 type 5001 is a "grey box" with no front, no display and no door. See front page.

EBL512 G3 conforms to the European standard EN54, part 2 and 4. The Swedish Fire brigade panel conforms to SS3654.

4.1. OPTIONS

EN 54-2 options with requirements	Clause in EN 54-2:1997/A1:2006
Fault signals from points	8.3
Alarm counter	7.13
Dependencies on more than one alarm signal (Type B)	7.12.2
Delays to outputs	7.11.1 b) + c) + d) + e) + f)
Test condition	10
Output to fire alarm devices	7.8
Output to fore alarm routing equipment	7.9.1
Alarm confirmation input from fire alarm routing equipment	7.9.2
Outputs to fire protection equipment (either Type B or Type C)	7.10.2 or 7.10.3
Fault monitoring of fire protection equipment	7.10.4
Output to fault warning routing equipment	8.9
Standardized input/output interface	11

EBL512 G3 conforms to the European standard EN54, part 2 and 4. The Swedish Fire brigade panel conforms to SS3654.

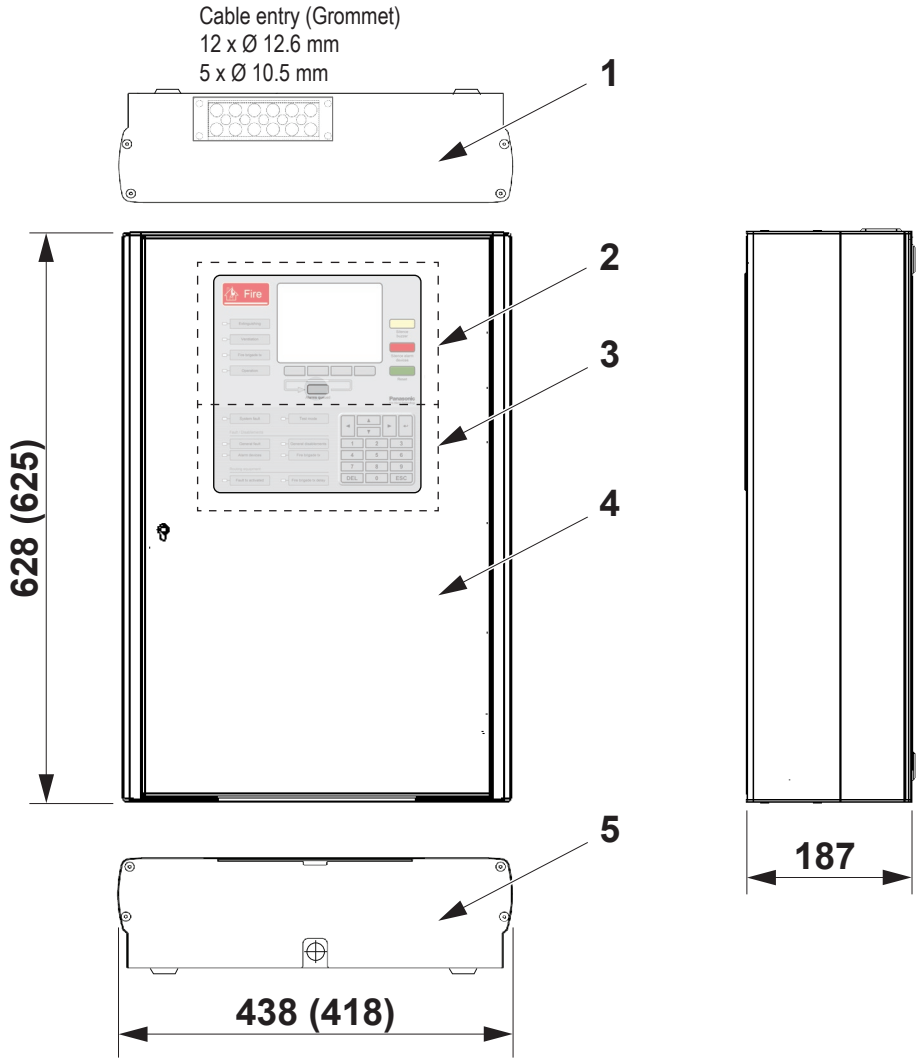

(Measures in mm)

1. CIE cover top
2. Fire brigade panel
3. Control panel
4. CIE front with LCD behind plexiglass
5. CIE cover bottom

4.2. FIRE BRIGADE PANEL

The fire brigade panel is used by the fire brigade personnel to see which alarm point(s) / zone(s) having activated fire alarm and to take required operational control of the system.

In the graphical display, the information displayed in the upper part is depending on how alarm points / zones having activated fire alarm. In the middle part will the fire alarms be shown, one alarm point or one zone together with user definable alarm text (if programmed).

4.3. CONTROL PANEL

The control panel is used to communicate with the system, for commissioning, monthly tests, and maintenance. To get access to the system and for operational control, a user account is required. Up to ten user names can be used for three different user level types. A password (six digits) for each user name is required.
The control panel has several system status LEDs and a keypad. See EBL512 G3 Operating Instructions for more information.

4.4. MAIN BOARD

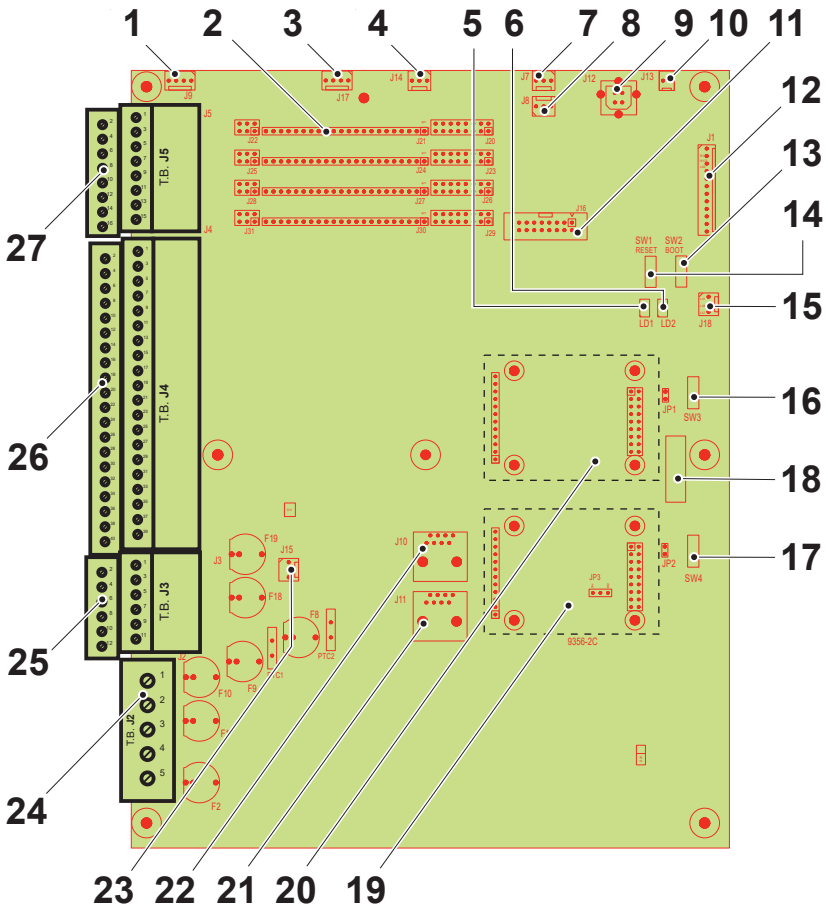

For more information on J2 – J5, see chapter 5. CONNECTIONS IN THE CIE on page 16.

1. J9, expansion boards
2. Connectors for 4 x Com loop board 5017
3. J17, connection of expansion board with constant 25V (not used)
4. J14, extra serial channel (not used)
5. LED D1
   Off = TLON board 0 communicating
   Steady = TLON board 1 communicating
6. LED D2
   Steady = Normal
   Off = Watchdog fault or
   main board in boot mode
7. J7, RS232, for Web-server / Gateway
8. J8, 24V Power supply for Web Server / Gateway
9. J12, Internal connection to USB port (type B), intended for communication of a PC (EBLWin)
10. J13, for door switch
11. J16, Not used
12. J1, for MMI board
13. SW2, main board boot [1)]
14. SW1, main board restart
15. J18, battery temp. sensor
16. SW3, service button for TLON board no. 0
17. SW4, service button for TLON board no. 1
18. Label for identification
19. Optional, Network board position1 (Secondary network) [2)]
20. Optional, Network board position 0 (Primary network) [2)]
21. J11, PC connection to TLON board no. 1
    (Only used for TLON Manager)
22. J10, PC connection to TLON board no. 0
    (Only used for TLON Manager)
23. J15, not used
24. J2
25. J3
26. J4
27. J5

1) Used to set the main board in “Boot” mode, e.g. in conjunction with software download
2) If only one TLON board shall be used, it has to be no. 0.

4.4.1. COM LOOP BOARD 5017

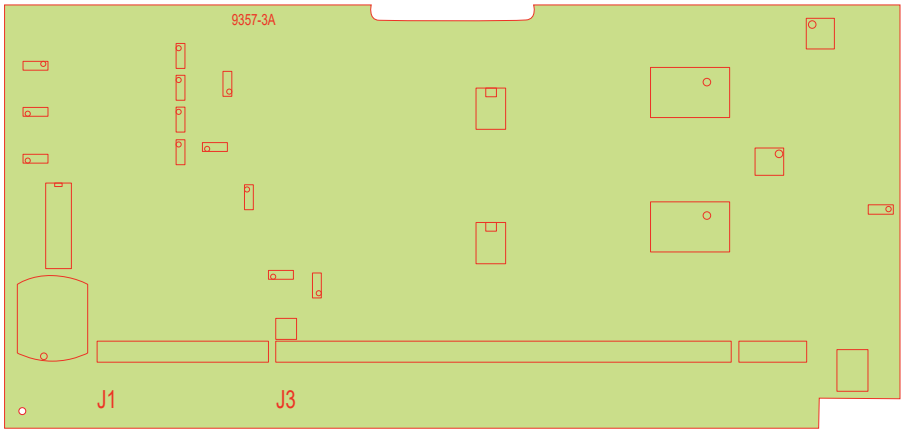

Four COM loop boards are mounted on the Main board and secured with a plate.
The COM loop boards have connections to the main board.

4.5. MMI BOARD

The MMI board is placed on the backside of the front in the CIE 5000.
The MMI board has connections to the;

- Main board
- Front (LEDs and key board)
- LCD
- Loudspeaker
- Printer

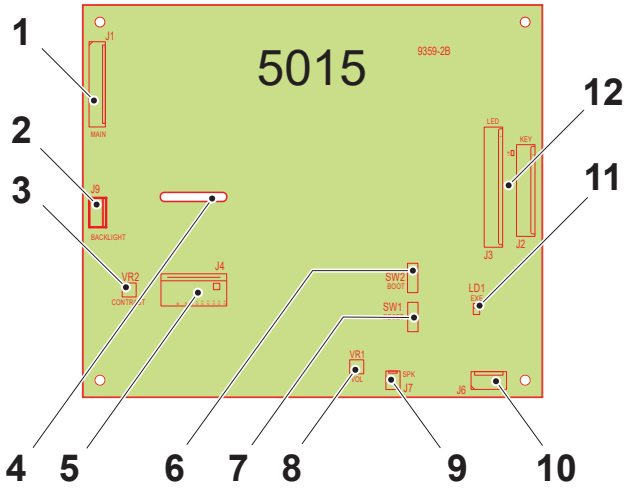

1. J1, Internal connection to main board
2. J9, Internal connection to LCD 5038
3. VR2, Potentiometer for LCD contrast
4. Hole for cable connection to LCD
5. J4, Internal connection to LCD (5038)
6. SW2, MMI board boot
7. SW1, MMI board restart
8. VR1, Potentiometer for loudspeaker
9. J7, Internal connection to loudspeaker (5036)
10. J6, Internal connection to printer (5058)
11. LED LD1,
    Steady: Normal condition
    Off: Watchdog fault or MMI board in “Boot” mode
12. J2 & J3, Internal connections to the front 5060/5061 (LEDs and keyboard)

4.6. CIE FRONT DOOR

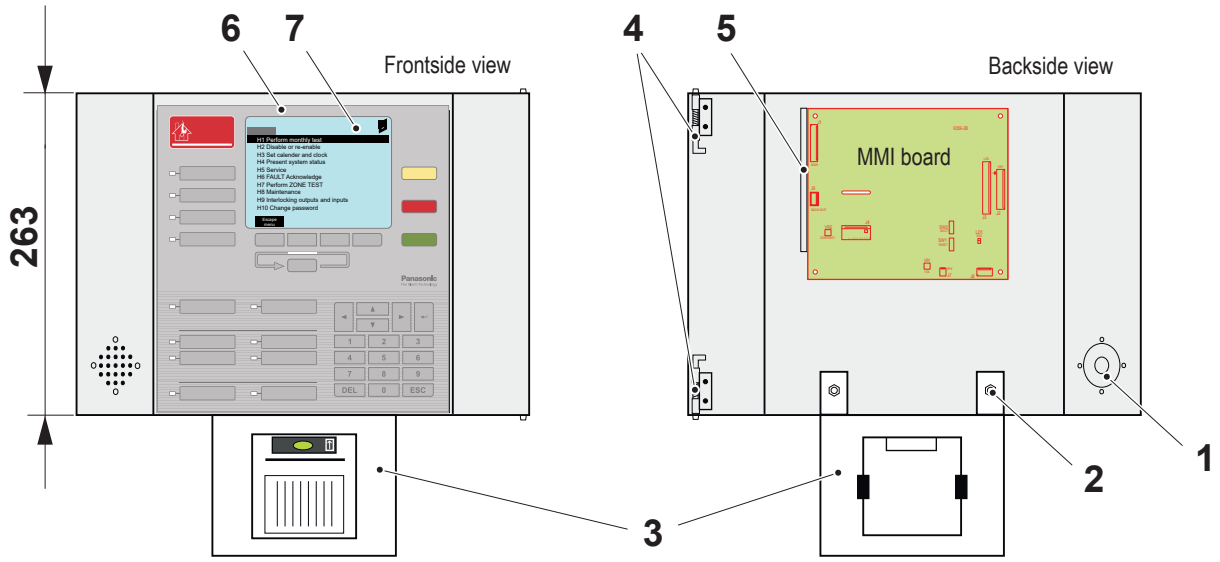

1. Loudspeaker mounted on the backside
2. 2 x M5 bolt and nut
3. Mounting frame for printer
4. Hinge with spring, for easy fixing / removal of the front door on / from the CIE metal housing
5. LCD
6. CIE front 5060/5061
7. LCD

5000 without a printer has no mounting frame for printer and has no opening for printer in the plate below the CIE front.

When replacing the MMI board 5011 with a MMI board 5015, the cable to the LCD needs to be pulled from the back of the MMI board 5015, and through the hole in the board, before mounting the board, see 4.5 MMI BOARD. Make sure that the cable is locked into the connector, and that the enclosed ferrite is mounted.

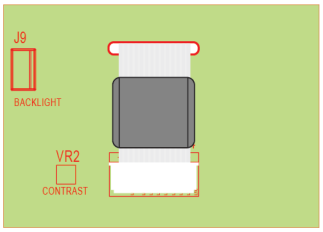

4.7. CIE METAL HOUSING

The metal housing is to be mounted on the wall mounting pate.

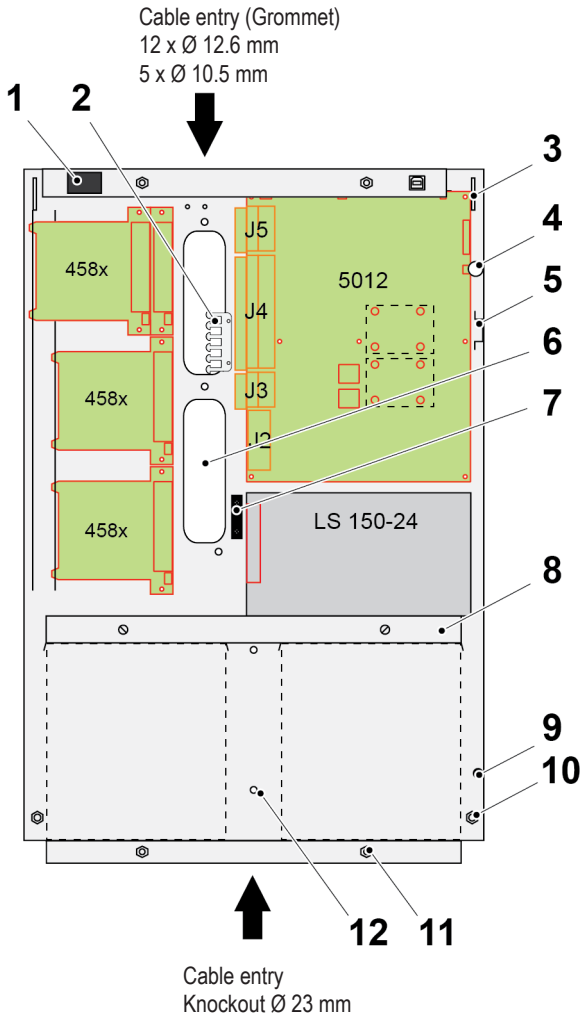

1. Door switch
2. Cable holder for shield to network cables and Display unit cables
3. Slit for hook on the wall mounting plate
4. Magnet
5. Symmetric 35 mm DIN rail for Web-server / Gateway
6. 2 x cable entry opening 37 x 128 mm
7. Mains cable clamp
8. Battery holder
9. Battery temperature sensor (5039)
10. 2 x M6 nut, for CIE metal housing fixing
11. 4 x M6 nut, for CIE cover fixing
12. 5 x hole for factory mounted cable tie

4.8. PRINTER

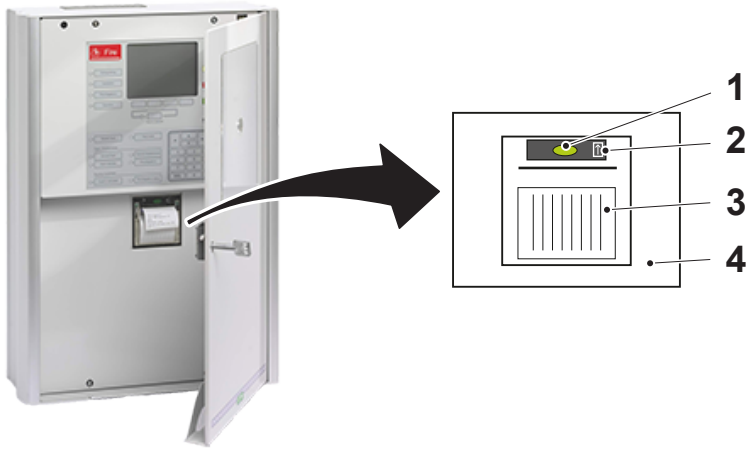

1. Release button, for change of paper roll
2. Paper feed button
3. Printer paper roll
4. Mounting frame for printer

The CIE5000 can be delivered with or without a printer depending on if “PRT” is added in the article number or not. The printer is mounted on the front panel door and is connected to the MMI board.
See 4.6. CIE FRONT DOOR on page 13.

When the printer is mounted, the checkbox “Printer” has to be marked in the EBLWin “Control unit properties” dialog box.

Alarms (fire alarms – including test mode alarms and heavy smoke/heat alarms) will always be printed. The following can also be printed:

- Faults via menu
- Disablements via menus
- Detectors activating service signal via menu
- The event logs via menu
- The control unit information/configuration via menu
- Activated interlocking inputs via menu

The printer only, not the mounting frame and connection cable, is available as spare part, type number 5058.

5. CONNECTIONS IN THE CIE

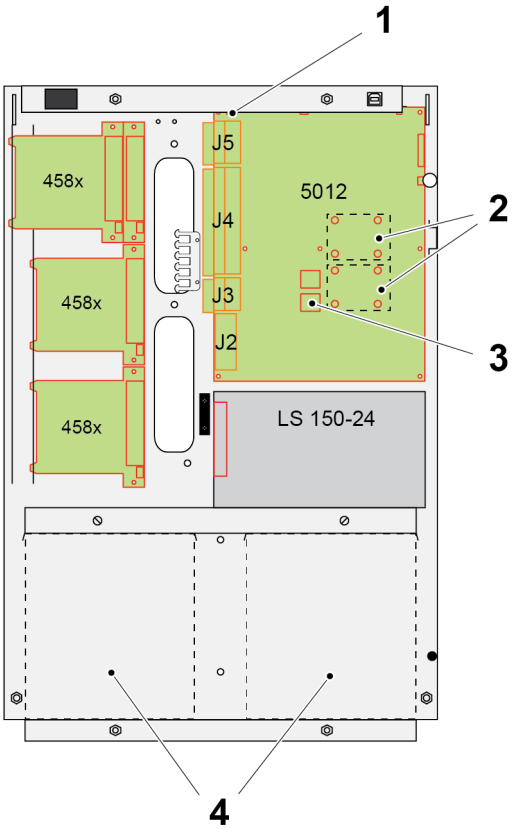

1. Connection for expansion boards
2. Position for Network boards connection
3. 2 x PC-connection for TLON network
4. Position for backup batteries

J5
- COM loops 0-3

J4
- Supervised voltage output S0-S3
- Relay output R0, R1
- Input I0-I3
- Fire brigade TX
- Faults TX
- TLON Network
- Display units power supply
- Display units RS485
- Display units RS485 redundant

J3
- Display units redundant power supply
- Power supply for routing equipment (0)
- Power supply (1-4)

J2
- Main board connection to batteries and rectifier

5012
- Mainboard

LS 150-24
- Power supply unit, rectifier (spare part number 5047)

458X
- Position for expansion boards

5.1. COM LOOPS

Each CIE has four COM loops (0-3) which are connected to terminal block J5. Connections according to 12. APPENDIX on page 36.

On each COM loop up to 253 COM loop units can be connected (Address range 001-253, may differ based on the SW version used, see planning instruction for more information). Regarding type and number of COM loop units in relation to the cable length / type, see chapter “COM loop cable length” and “Current consumption” in EBL512 G3 Planning instructions.

Each COM loop unit has a COM loop address (for example 123) and depending on the control unit number (for example 04) and the loop number (for example 0) each COM loop unit will get a technical number (040123).

Each alarm point and zone line input has a fire alarm presentation number (Zone-address), for example 001-01. See EBL512 G3 Operating Instructions for more information.

The CIE sends data by changing the polarity on the loop.
Voltage on the loop terminals: 25.0 V ± 1.5 V.
The COM loops are LPS outputs (Limited Power Source). The COM loop outputs has maximum effect below 100W.
Maximum loop current: 350 mA.

SUB-LOOPS

Each COM loop can have up to four SUB-loops which are connected to the 4585 board mounted inside the 4466 unit.

It is possible to disconnect individual SUB-loops. Disconnection of the COM loop will disconnect the SUB-loops.

When you re-connect a COM loop, any individually disconnected SUB-loops on that COM loop will also be re-connected.

SHORT CIRCUIT ISOLATORS

Up to 128 short circuit isolators per COM loop and SUB-loops can be used, which gives 129 loop segments.

In case of a short circuit on a COM loop, only the affected segment will be disabled.

One short circuit isolator per 32 alarm points is required according to EN54-2.

EBL512 G3 has one built-in isolator in the-A direction (no. "A") and one in the B-direction (no. "B").

5.2. PROGRAMMABLE VOLTAGE OUTPUTS (S0-S3)

The 24V DC outputs S0-S3 are normally supervised. The outputs are in EBLWin default set as supervised, but via EBLWin it is possible to set each output individually to be not supervised or supervised with EOL. LPS outputs.

Voltage Active: Supervised:	 19.0 – 28.7V DC (nom. 23.5 V DC) ~ - 5.0V DC
Current Active: Supervised:	 ≤ 0.5 A ~ - 3 mA
Line resistance RL:	≤ 32 Ohm depending on current outtake and allowed voltage of the connected device.

Outputs S0 - S3 are protected by resettable PTC Fuses.

Connections according to 12.2. MAIN BOARD J4 on page 37.
See also chapter Programmable outputs in EBL512 G3 Planning instructions.

Output S3 will be low in case of system fault (via the watch dog reset circuit). It may be used as a supervised voltage output for fault warning routing equipment (Fault tx), see also chapter Output S3 in EBL512 G3 Planning instructions.

For EN54-13 compliance, End-of-line device type 4472 shall be mounted after the last unit on the line.

5.3. PROGRAMMABLE RELAY OUTPUTS (R0-R1)

Each control unit has two programmable relay outputs.
R0 Relay output, NO or NC contacts programmable
R1 Relay output, NO or NC contacts programmable
Relay contact ratings: Max. 2A @ 30V DC.

Connections according to 12.2. MAIN BOARD J4 on page 37.

5.4. PROGRAMMABLE INPUTS (I0-I3)

In each CIE are four programmable, supervised / not supervised inputs (I0-I3) available.

NOT SUPERVISED
Normally open (R > 10k)
Normally closed (R < 10k)
Activation time: > 1 sec.

Each supervised input can be in different states.
Depending on the selected logic, Normally open (high resistance) or Normally closed (low resistance), the following tables are valid:

SIMPLE SUPERVISION

Line resistance R	Normally open (high resistance)	Normally closed (low resistance)
R < 10 k	Active	-
10 k < R < 43 k	Inactive	-
R > 43 k	Fault	-

ADVANCE SUPERVISION

Line resistance R	Normally open (high resistance)	Normally closed (low resistance)
R < 70	Fault	Fault
70 < R < 2 k	Active	Inactive
2 k < R < 3 k	Fault	Fault
3 k < R < 4 k	Inactive	Active
R > 4 k	Fault	Fault

Connections according to 12.2. MAIN BOARD J4 on page 37.
See also chapter Programmable inputs in EBL512 G3 Planning instructions.

5.5. RELAY OUTPUTS FOR ROUTING EQUIPMENT (TX)

Not programmable outputs. Connections according to 12.2. MAIN BOARD J4 on page 37.

5.5.1. FIRE ALARM OUTPUT

This output is normally used for fire brigade tx. It is a change-over relay contact that will be activated when a fire alarm is generated in the system.

Routing equipment has to fulfil the EN 60950-1 clause 6.2 requirement.

5.5.2. FAULT CONDITION OUTPUT

This output is normally used for fault warning routing equipment (fault tx). it is a change-over relay contact that is normally activated and will be de-activated in case of a fault in the CIE. Also when the CIE is out of power or watch-dog fault.

5.6. NETWORK

The EBL512 G3 system can be built up as a single Network or as a redundant Network, via the Network board 5040 or TLON connection boards (5090). The network boards must be ordered and plugged in each control unit.

The old TLON network board 1590 must not be used.

See also EBL512 G3 Planning instructions and the Operating instruction TLON Manager kit MEW01983.

5.7. POWER SUPPLY 24 V FOR DISPLAY UNITS

Voltage: 19.4 – 28.7V DC (nom. 23.5V DC), Current: min 0 / max. 1.6 A (Fuse F19). LPS output.
See 12.2. MAIN BOARD J4 on page 37.

5.8. DISPLAY UNITS – RS485

See 12.2. MAIN BOARD J4 on page 37 and Planning instructions section “display units - RS485 interface”.

5.9. POWER SUPPLY 24 V FOR DISPLAY UNIT REDUNDANT

Voltage: 19.4 – 28.5V DC (nom. 23.5V DC), Current: min 0 / max. 1.6 A (Fuse F18). LPS output.
See 12.1. MAIN BOARD J3 on page 36.

5.10. POWER SUPPLY 24 V FOR ROUTING EQUIPMENT

Voltage: 20.1 – 27.0V DC (nom. 23.1V DC), Current: min 0 / max. 0.5 A (Fuse F8). LPS output.
See 12.1. MAIN BOARD J3 on page 36.

5.11. POWER SUPPLY 1

Voltage: 19.4 – 28.5V DC (nom. 23.5V DC), Current: min 0 / max. 1.6 A (Fuse F9). LPS output.
See 12.1. MAIN BOARD J3 on page 36.

5.12. POWER SUPPLY 2-4

Voltage: 19.4 – 28.5V DC (nom. 23.5V DC), Current: min 0 / max. 3.15 A (Fuse F10). LPS output.
See 12.1. MAIN BOARD J3 on page 36.

Fuse F10 is common for power supply outputs 2-4.

The sum of current through F8, F18 and F19 is limited to max 3.15A, and The sum of current through F9 and F10 is limited to 3.15A, see 12.1. MAIN BOARD J3 on page 36.

6. MOUNTING

CAUTION! Heavy object!
Heavy lifting may cause injury. Get help with heavy lifts.

The CIE must be mounted on the wall. Screws are not supplied. Make sure that the screw type is suitable for the wall material. Make sure that the attachment is dimensioned for an equipment mass of up to 46 kg.

CAUTION! Sharp edges!
Risk of cuts on fingers when touching sharp edges inside the CIE.

6.1. WALL MOUNTING PLATE

The 5000 and 5001 units are delivered with a mounting plate approved for mounting on an incombustible wall, for example concrete.

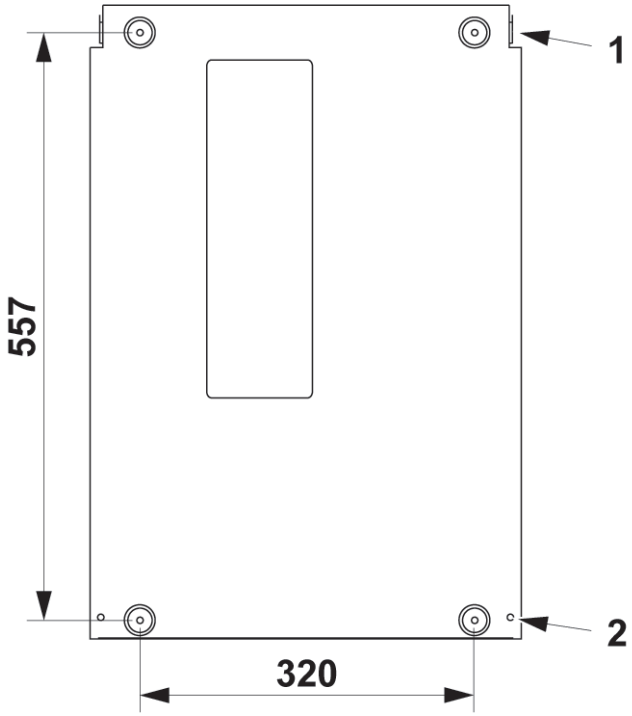

(Measures in mm)

1. 2 x hooks for CIE metal housing
2. 2 x M6 bolt for CIE metal housing fixing

a) Mount the wall mounting plate on the wall.
b) Hook the CIE metal housing on the wall mounting plate and fixate the housing.
c) Cable connections
d) Commissioning
e) Put on the CIE skin on the metal housing and fix.

6.2. MOUNTING PLATE FOR 19” MOUNTING RACK, 5020

When the CIE shall be mounted in a 19” mounting rack, the standard mounting plate can be replaced with a Mounting plate for 19” mounting rack 5020.

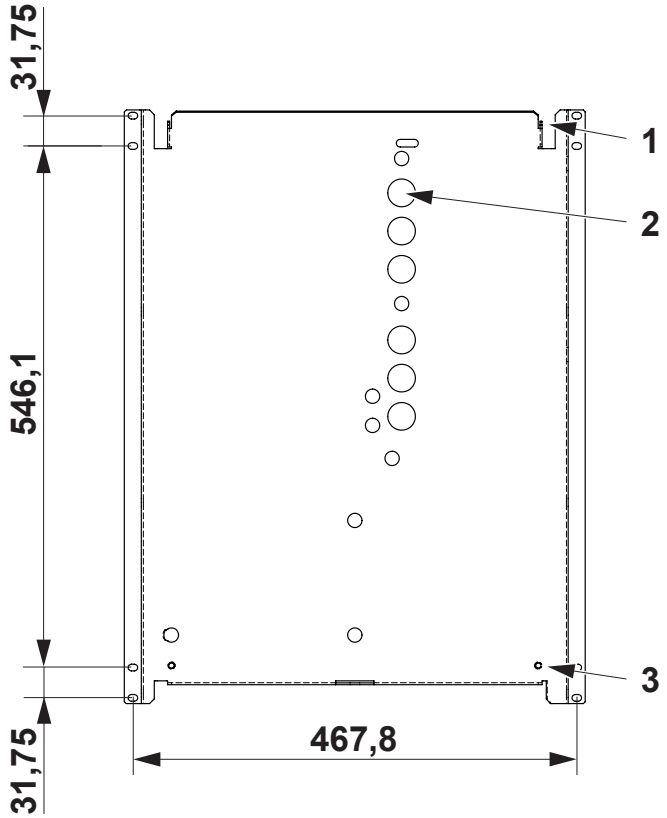

(Measures in mm)

1. 2 x hooks for CIE metal housing
2. 6 x holes Ø 29
3. 2 x M6 bolt for CIE metal housing fixing

If the Mounting plate for 19 inch rack 5020 or the Mounting plate for inflammable wall 5021 is used, the cable holder will interfere with the rubber glands and need to be turned upside down, or it can be removed if a network and display units are not connected.

6.3. MOUNTING PLATE FOR INFLAMMABLE WALL, 5021

When the CIE unit shall be mounted on an inflammable wall, the standard mounting plate should be replaced with a Mounting plate for inflammable wall 5021, which can be provided with cable glands.

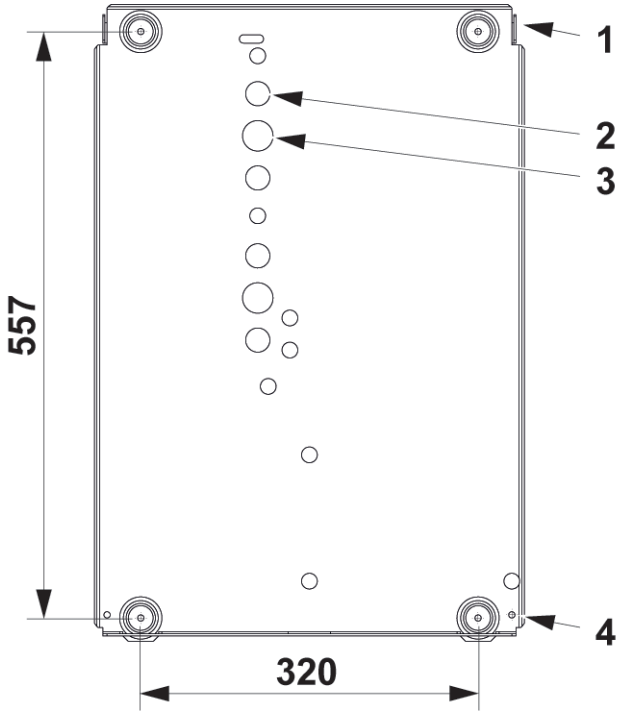

(Measures in mm)

1. 2 x hooks for CIE metal housing
2. 4 x knockout Ø 23
3. 2 x knockout Ø 29
4. 2 x M6 bolt for CIE metal housing fixing

7. INSTALLATION AND WIRING

CAUTION! Risk of electric shock!
The control unit has two energy sources. Make sure to disconnect the equipment from the mains power supply before dismounting the cover from the CIE. Also make sure to disconnect the fuse F2 for the back-up batteries, before touching anything in the CIE.

The mains cable shall be securely clamped in the CIE housing / chassi and the conductors shall be as short as possible. The mains protective earthing conductor shall be longer than the other conductors to ensure that it is the last to be disconnected if the mains cable clamp should fail.

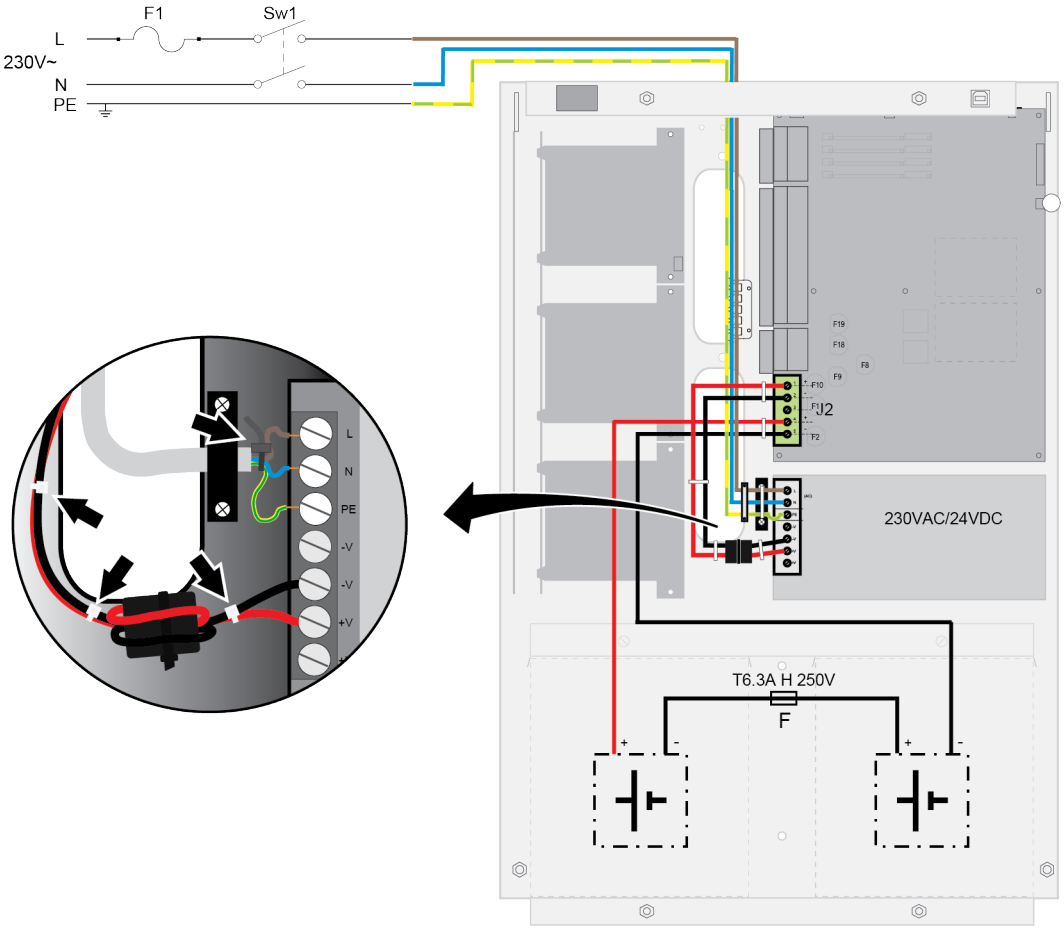

Mains is connected to a household fuse, max 10 A, intended for the fire alarm CIE only, and marked according to national regulations and codes of practice. Use cable ties to keep mains and 24V DC wiring well separated.

The CIE 5000/5001 is intended for permanent installation, according to national regulations.

7.1. WIRING OUTSIDE THE BUILDING

Only RS485 and a network may to be drawn from the CIE and out of the building, or to another protecting earthing system.

If other cabling than RS485 or a network should be drawn out of the building, it must be protected with a transient filter. Two filters are required for each cable type. One for each building.

Following type of transient filters can be used. They are adapted for grounded DIN rail.

Transient filters	
24V DC, 4A	ED20 - 24V DC
COM Loop, 1A	EDL1V - 24 or EDL2V – 24
RS485 + 24V, 3A	EDL2V – 24 - PS

7.2. DISCONNECT DEVICE

Appropriate disconnect device (all-pole mains switch) shall be provided as a part of the building installation. The disconnect device shall have a contact separation of at least 3 mm.
Mount a two-way circuit breaker, outside and close to the CIE. The circuit breaker is to be used by service / maintenance personnel.

7.3. NETWORK AND DISPLAY UNITS

The shield for the network cabling and display unit cabling needs to be grounded and shall be strapped to the cable holder.

a) Remove the insulating cover on the cables. The remaining strip of the shield shall be about 15 mm.
b) Bend the shield backwards over the insulating cover.
c) Strap the cables to the cable holder with two straps.

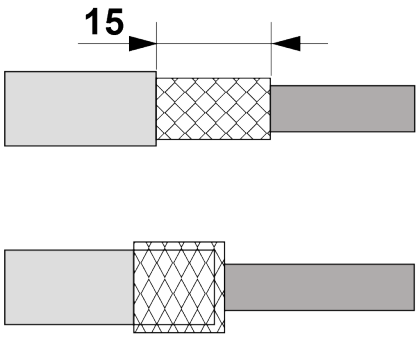

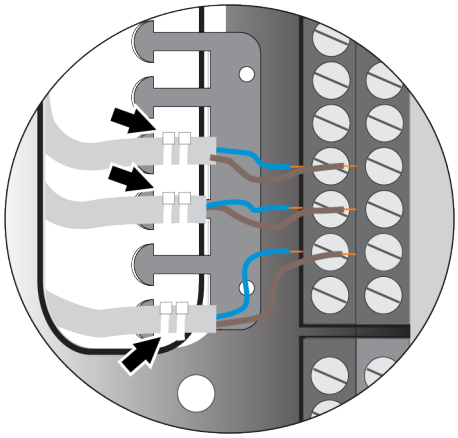

(Measures in mm)

7.4. POWER SUPPLY

The power supply rated output current is ≤ 6.5 A but is limited with the main board fuse F1 to 6.3 A.
Replacement fuses must fulfill IEC 60127-2.
In quiescent condition ≤ 2.5 A is available for connected equipment.
In fire alarm condition ≤ 6.0 A is available for connected equipment.

Internal wiring (in the CIE) must fulfill IEC 60332, 60695-11-21, or UL2556 (Flammability test). This also applies to external wiring that might generate more than 15W, such as voltage outputs S0-S3, power supply P1-P4, COM loops 0-3, and batteries.

External wiring (outside the CIE) must have a diameter > 0.4 mm (AWG 26). Otherwise it must be secured with a fuse, max 1A.

National regulations must be followed.

The main power source is a built-in switched mode power supply LS150-24, 230V AC, 2.0 A / 24V DC, 6.5 A.

7.5. NETWORK BOARD 5040

The network boards 5040 shall be mounted in position no. 0 and position no. 1 on the main board.

a) Mount the o-ring and the ferrite on the spacers connected to protective earth (one spacer per network board).
b) Mounting the network boards.
c) Connect the network cables directly to the network boards.

Make sure that the ethernet cables are well separated from the power supply cables.

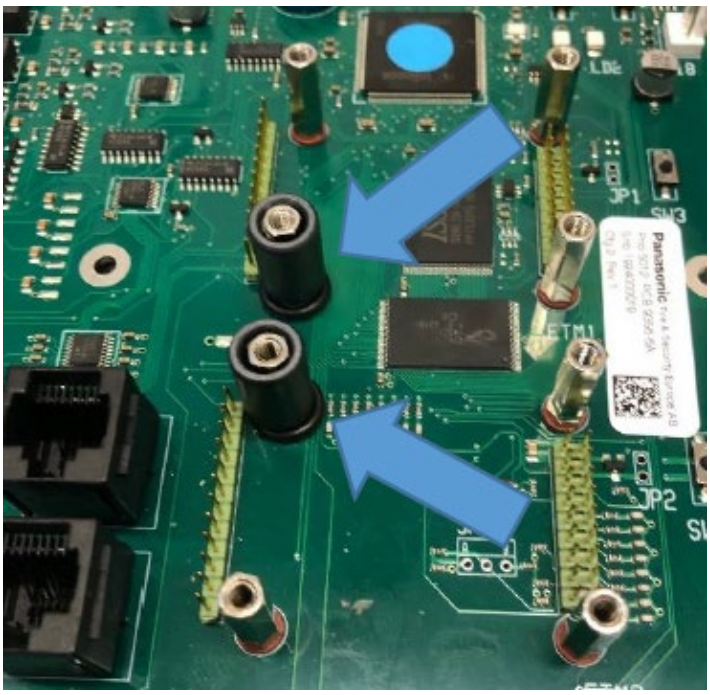

Network board 5040 require S/W version 3.0.x or newer.

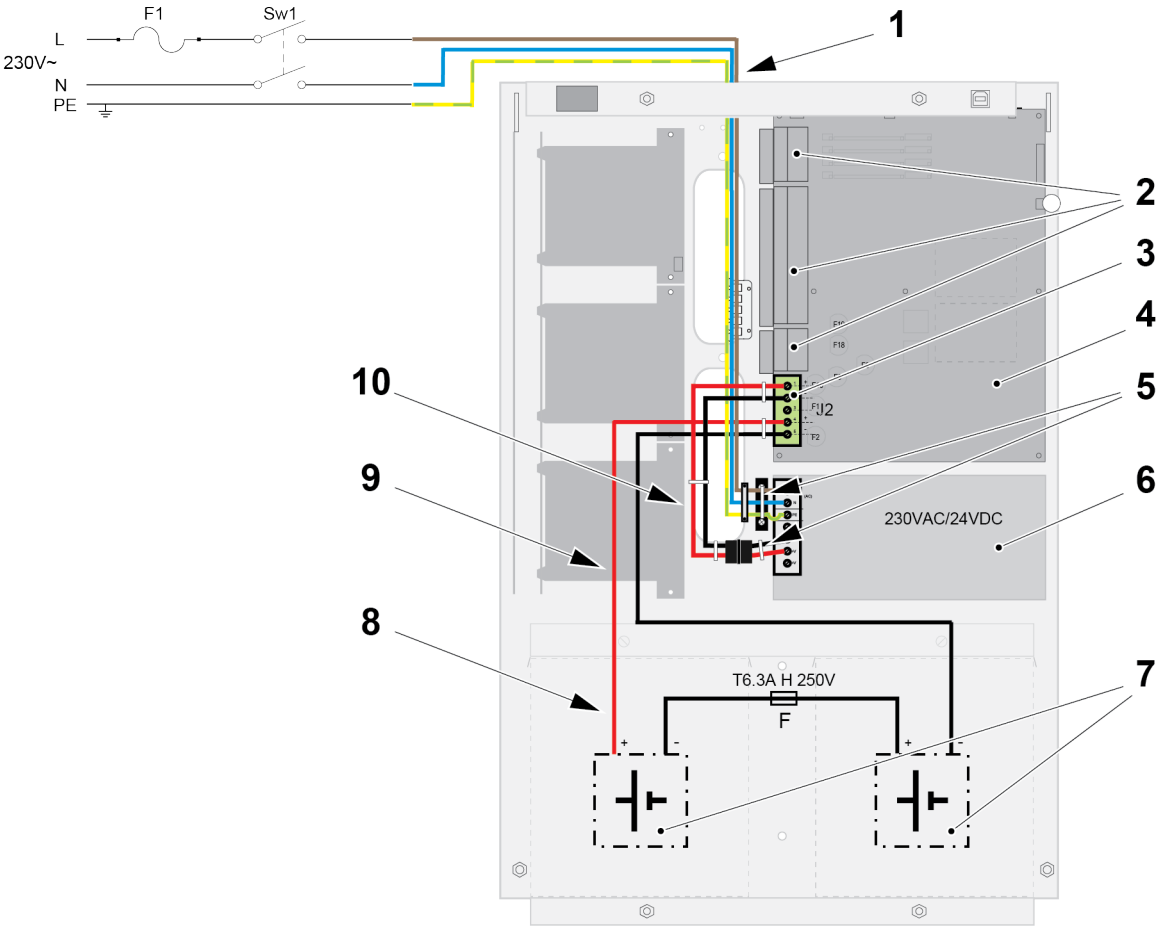

CAUTION!
The control unit has two energy sources.

The lid for the screw terminals shall after the installation be correctly applied, i.e. protecting the screw terminals.

Power supply function in CIE		Min / max voltage	Min / max current
1	Mains, 230 V AC	195 V / 253V AC	
2	Output current for continuous use. (I_{max} a) Output current for continuous use, no battery charging. (I_{max} b) Output voltage	 19.0 V / 28.7V DC	2.5 A 6 A
3	Battery charging current from main board to the battery.	Max 29V DC	Max 2.4 A
4	Main board	-	-
5	Cable tie to keep the 24V DC conductors well separated from the mains conductors	-	-
6	Power supply (rectifier), 230V AC, 2.0 A / 24V DC, 6.5 A	-	-
7	Internal batteries 2 x 12V, 17 - 28 Ah External batteries 2 x 12 V, 17 - 65 Ah	12V DC 12V DC	-
8	Battery charging current.. 27.3 ± 0.1V@20°C but 27.3 ±0.7 V depending on the battery temperature.	-	Max 2.4 A
9	Battery power supply / current, by loss of 230V AC. Imin, type 5000 current consumption: Imin, type 5001 current consumption: RImax: 0.5 Ω	21.0 V / 28V DC - - -	Max 6.3 A 0.17 A 0.13 A -
10	Power supply from rectifier to main board	23.8 V / 24.2V DC	Max 6.3 A

7.6. BATTERIES

CAUTION!
Risk of explosion if battery is replaced by an incorrect type. Dispose used batteries according to instructions.

The batteries are not included in the CIE.

Only insulated tools are to be used for battery installation / maintenance.

By loss of 230 V AC the control unit is powered by backup batteries, two sealed lead-acid batteries, VRLA cells, 12 V, 17 – 65 Ah.

- MAX physical size 180 x 168 x 130 mm (H x L x W) inside CIE.
- Internal batteries shall fulfil UL94 V-1 or better, including a relevant VRLA battery safety standard (IEC, EN, UL).
- Only batteries with a specified "Final voltage" of 10.5 V must be used.
- Fuse between batteries: T6.3 AH 250 V (5x20mm ceramic).
- Max operating temperature during charging: 50°C
- The batteries shall be marked with their type designation and code or number identifying the production period.

Batteries larger than the 12 V, 28 Ah have to be placed outside the control unit, with maximum 2 meters of cable in between.
The batteries and the rectifier are connected to the main board, which also handles the charging of the batteries.

Battery wiring must fulfill IEC 60332, 60695-11-21, or UL2556 (Flammability test).
The European Standard EN 62368-1 and national regulations must be followed.

Battery charging will be turned off during fire alarm condition.

See also EBL512 G3 Planning instructions.

7.7. INTERNAL CONNECTIONS

The batteries and power supply are connected to the main board, which handles the charging of the batteries.

Terminal block J2

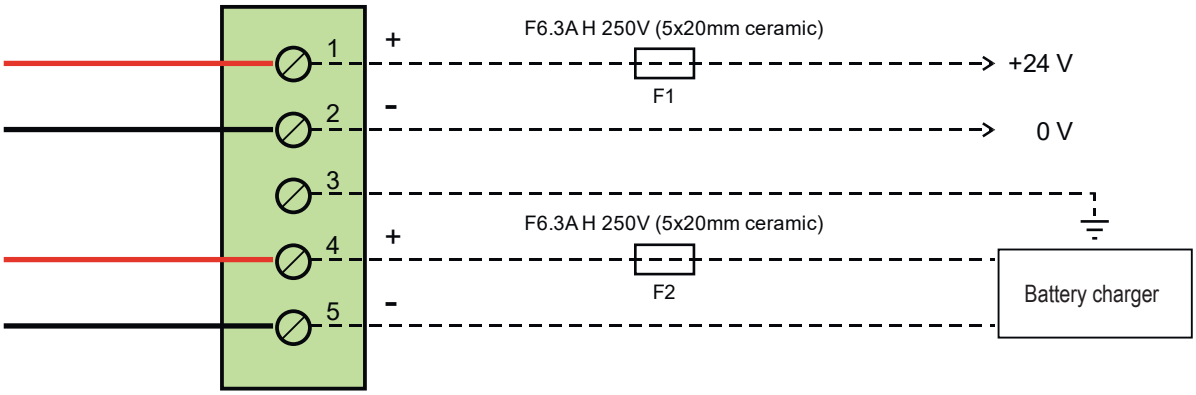

7.8. EXAMPLE OF COM LOOP WIRING

Screen wire termination is not provided.

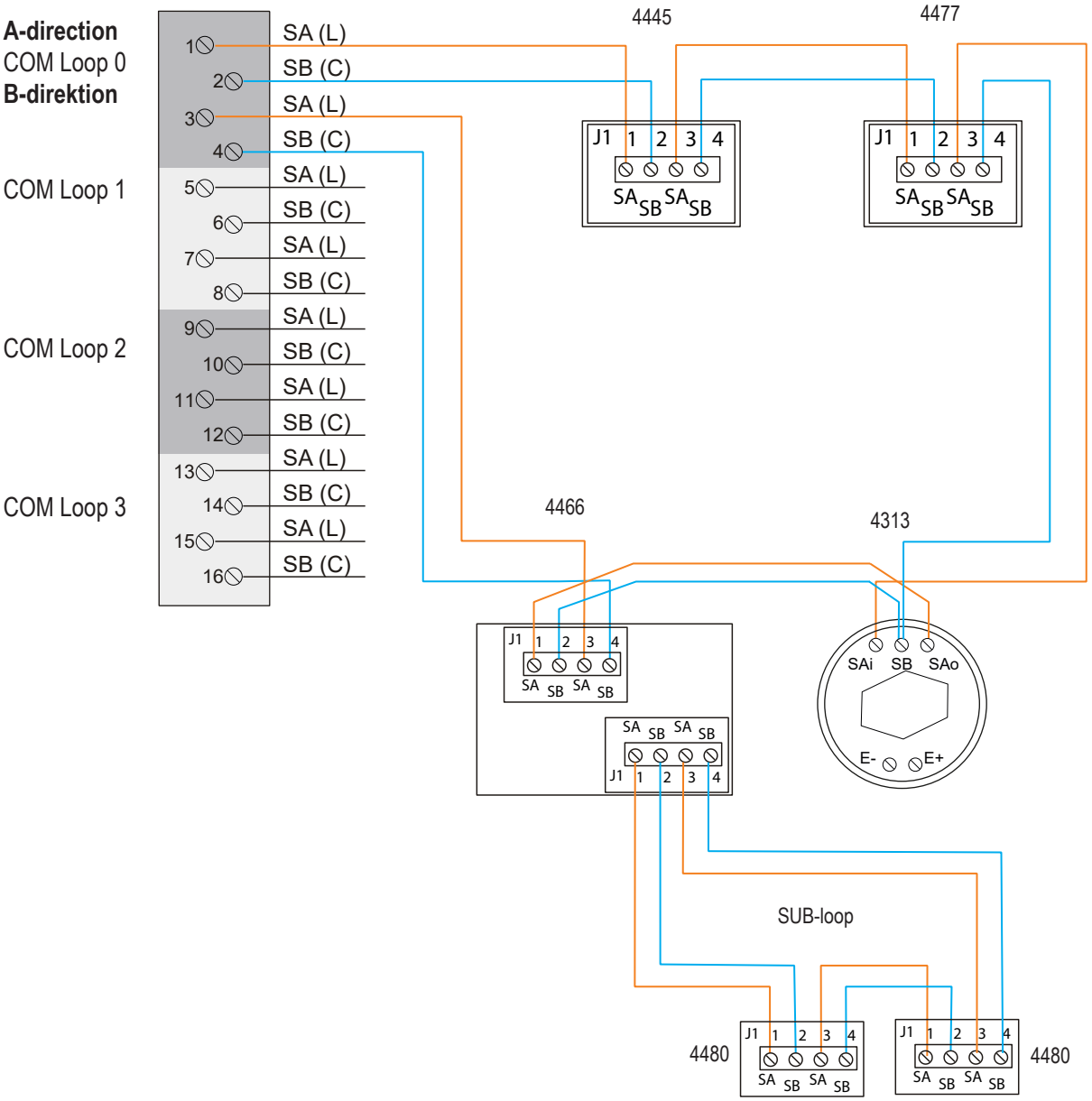

Wire size (Min)	Ø 0.6 mm (0.3 mm²)
Wire size (Max)	Ø 1.6 mm (2 mm²)

7.9. PROTECTIVE EARTHING

When all wire connections are made, close the front (1) and make sure to tighten the two screws (2).
Then, fit the cover (3) and make sure to tighten the four screws (4).
The screws are connected to protective earthing. There is no separate bonding cable for protective earth.

See also chapter 3. SAFETY INSTRUCTIONS on page 6.

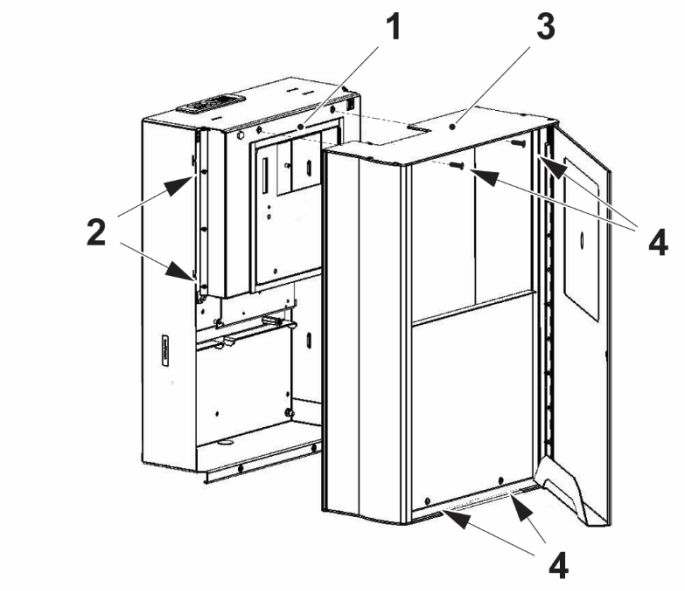

1. Front
2. Screws
3. Cover
4. Screws

8. MAINTENANCE

8.1. PCB REPLACEMENT

If the control unit is a part of a TLON Network, note that some TLON information is saved in the TLON connection board memory and some in the main board memory.

8.1.1. REPLACEMENT OF THE MMI BOARD

S/W version of the MMI board must be same as on main board. Must match exactly for X.Y.Z

8.1.2. REPLACEMENT OF THE MAIN BOARD

Perform the following steps:

a) Download S/W if necessary
b) Update 'No of alarm points' if necessary (with special password).
c) If the control unit is part of a TLON network, perform 'Update' in TLON Manager (in TLON Manager 1.2 also 'Save').
d) Download SSD
e) Perform calibration of outputs
f) Change access codes (if necessary - only valid for software version < 2.0.0)
g) Perform a safe shut down and restart the control unit

8.1.3. TLON CONNECTION BOARD

If the TLON connection board is replaced: Perform a Replace in TLON manager for the correct control unit. Then restart the control unit where the TLON board was replaced.

9. TROUBLESHOOTING

9.1. EARTH FAULT

The earth voltage can be measured in two ways; either between earth and the rectifier or between earth and the batteries. If mains is connected the measurement should be done against the rectifier otherwise it should be done against the batteries.

The following tables show the nominal earth voltage:

Nominal earth voltage		
0V-to-Earth	+12.9V DC	(Control unit powered by mains)
B- -to-Earth	+14.2V DC	(Control unit powered by batteries)

The AC voltage is dependent on the rectifier. Best way is to turn off mains and let the control unit run on batteries. Then the AC voltage should be less than 0.5V.

10. TECHNICAL DATA 5000

All current consumptions are valid by nominal voltage and by 25 °C.

Voltage: Primary System	 230 V AC (195-253) 2.0 A 50 Hz 24V DC
COM loop Voltage	Min 23V - max 25V at terminal NOTE! The voltage on the loop itself may drop to 12V depending on the loop current consumption and loop resistance. Se also chapter "COM loop cable length" in the Planning instructions.
Rated output voltage	19.0 – 28.7V DC (Max ripple 300 mVp-p)
Current: Quiescent / Active	 Depending on type (5000 or 5001), type and number of expansion boards, connected external equipement and so on. See chapter "Current consumption" in the Planning instructions.
Number of addresses	Maximum 1012§§§§ (Number of addressed may differ based on the SW version used, see planning instruction for more information)
Number of alarm points	Maximum 512
Short circuit isolator	Yes, for loops 0-3
Internal battery	Not included
Material	Metal cabinet: Aluminum-zinc – AZ150
Ambient temperature: Operating Storage	 -5 to +40 °C (indoor use only) -30 to +60 °C
Maximum heat effect	40W
Ambient humidity	Maximum 95 % RH (Non condensing)
Altitude	< 2000 m above sea level
Ingress protection rating	IP30
Acceptable pollution degree	Degree1 and 2: None or dry, non-conductive pollution
Size: H x W x D	 628 x 438 x 187 mm
Weight:	23.1 kg (no printer, no internal batteries) 23.6 kg (with printer, no batteries) 46 kg (with printer, with 2 x batteries)
Colour	Light grey (NCS S 1500-N / PMS Cool Gray 2) and Aluminum.

11. TECHNICAL DATA 5001

All current consumptions are valid by nominal voltage and by 25 °C.

Voltage: Primary System	 230 V AC (195-253) 2.0 A 50 Hz 24V DC
COM loop Voltage	Min 23V - max 25V at terminal NOTE! The voltage on the loop itself may drop to 12V depending on the loop current consumption and loop resistance. Se also chapter "COM loop cable length" in the Planning instructions.
Rated output voltage	19.0 – 28.7V DC (Max ripple 300 mVp-p)
Current: Quiescent / Active	 Depending on type (5000 or 5001), type and number of expansion boards, connected external equipement and so on. See chapter "Current consumption" in the Planning instructions.
Number of addresses	Maximum 1012 (Number of addresses may differ based on the SW version used, see planning instruction for more information)
Number of alarm points	Maximum 512
Short circuit isolator	Yes, for loops 0-3
Internal battery	Not included
Material	Metal cabinet: Aluminum-zinc – AZ150
Ambient temperature: Operating Storage	 -5 to +40 °C (indoor use only) -30 to +60 °C
Maximum heat effect	40W
Ambient humidity	Maximum 95 % RH (Non condensing)
Altitude	< 2000 m above sea level
Ingress protection rating	IP30
Acceptable pollution degree	Degree1 and 2: None or dry, non-conductive pollution
Size: H x W x D	 625 x 418 x 177 mm
Weight:	19 kg (no internal batteries) 41 kg (with 2 x batteries)
Colour	Light grey (NCS S 1500-N / PMS Cool Gray 2)

12. APPENDIX

12.1. MAIN BOARD J3

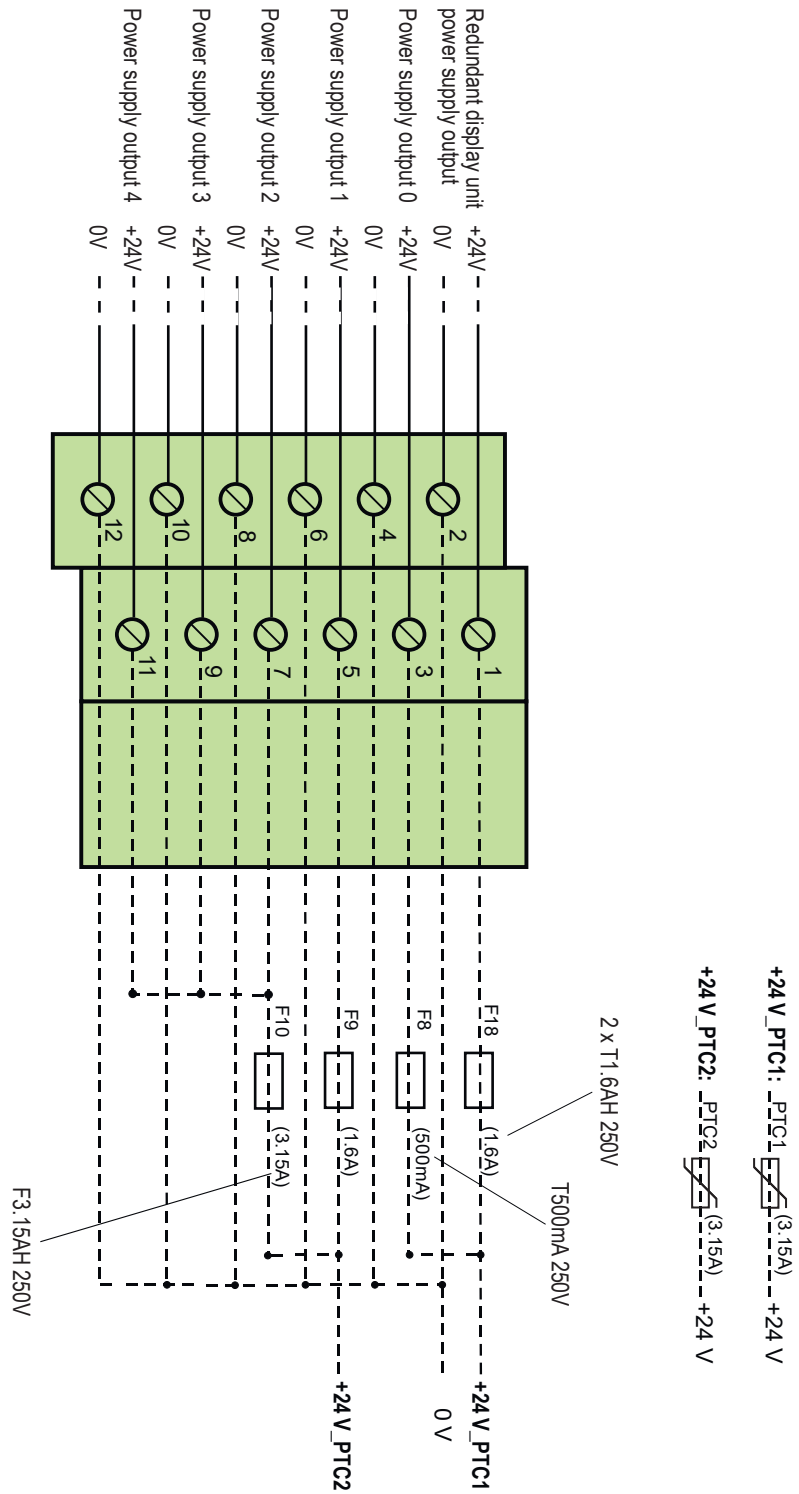

12.2. MAIN BOARD J4

12.2.1. J4:21-40

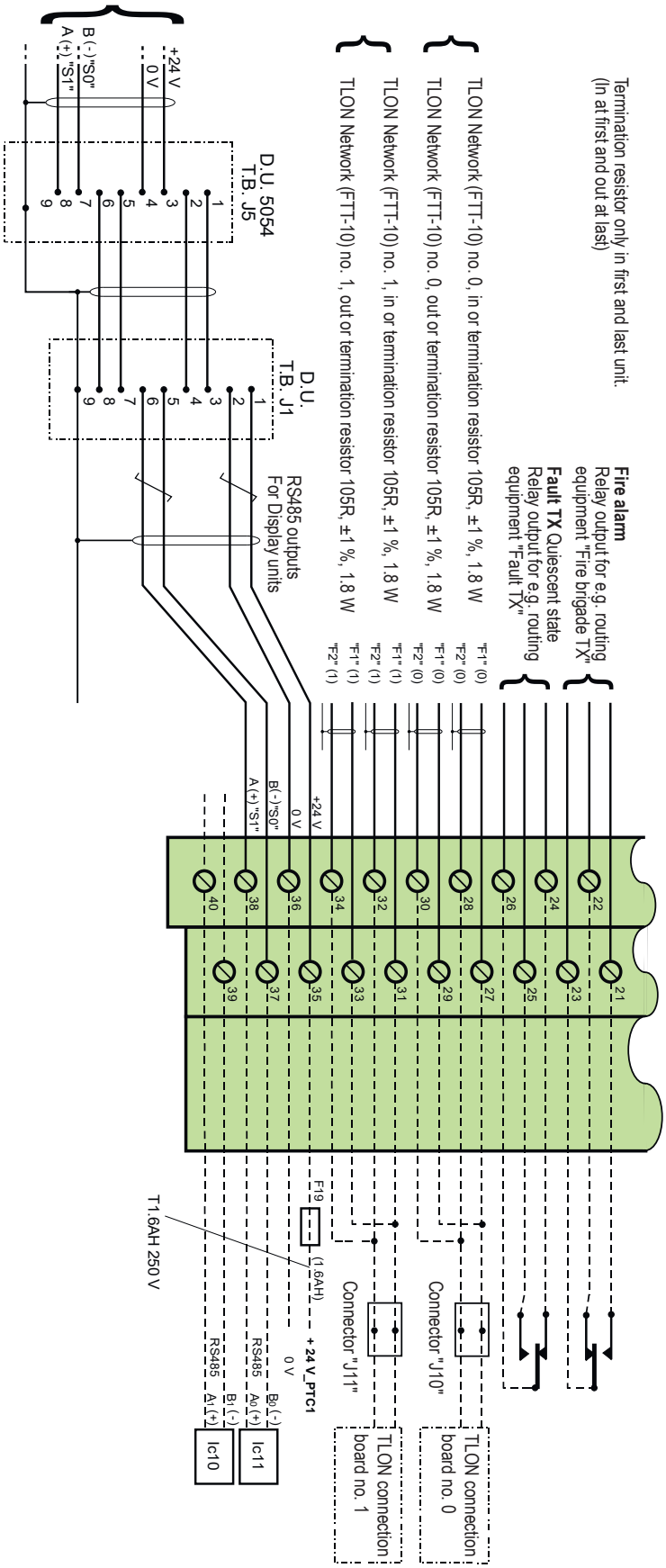

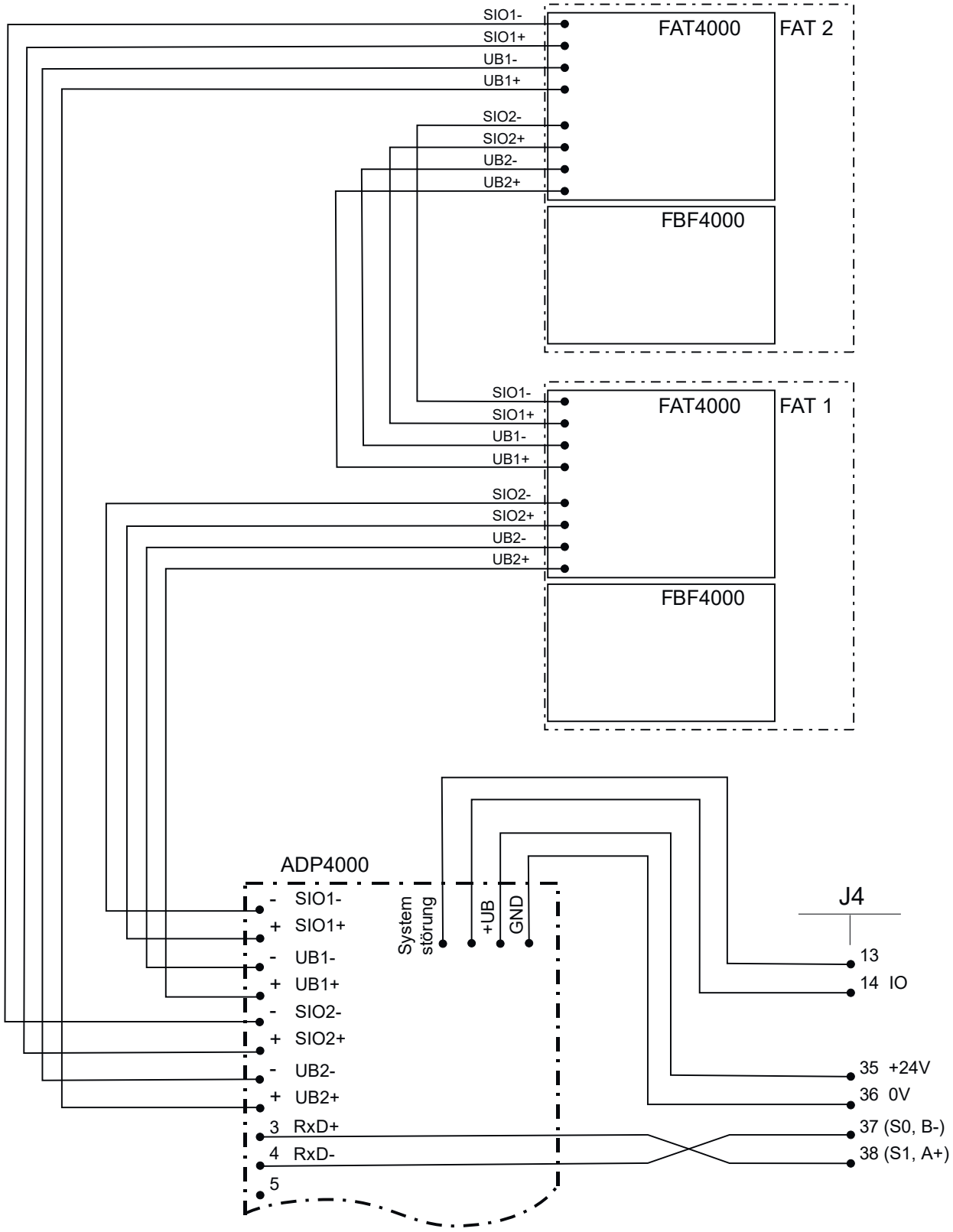
FAT4000
FAT 2
FBF4000
SIO1-
SIO1+
UB1-
UB1+
SIO2-
SIO2+
UB2-
UB2+
FAT4000
FAT 1
FBF4000
SIO1-
SIO1+
UB1-
UB1+
SIO2-
SIO2+
UB2-
UB2+
ADP4000
- SIO1-
+ SIO1+
- UB1-
+ UB1+
- SIO2-
+ SIO2+
- UB2-
+ UB2+
3 RxD+
4 RxD-
5
System störung
+UB
GND
J4
13
14 IO
35 +24V
36 0V
37 (S0, B-)
38 (S1, A+)

12.2.2. EN54-13 COMPLIANCE

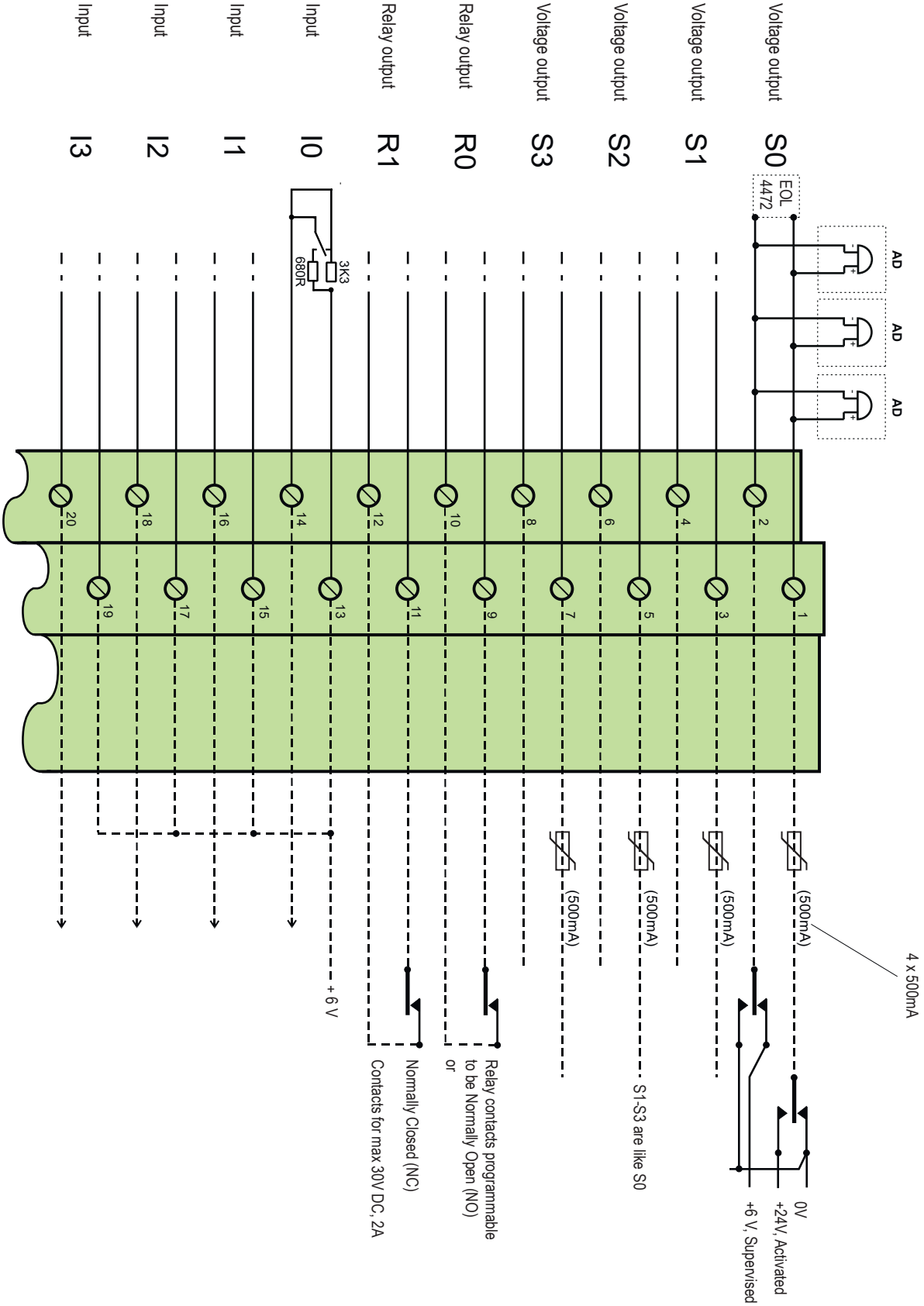

12.2.3. NON COMPLIANCE

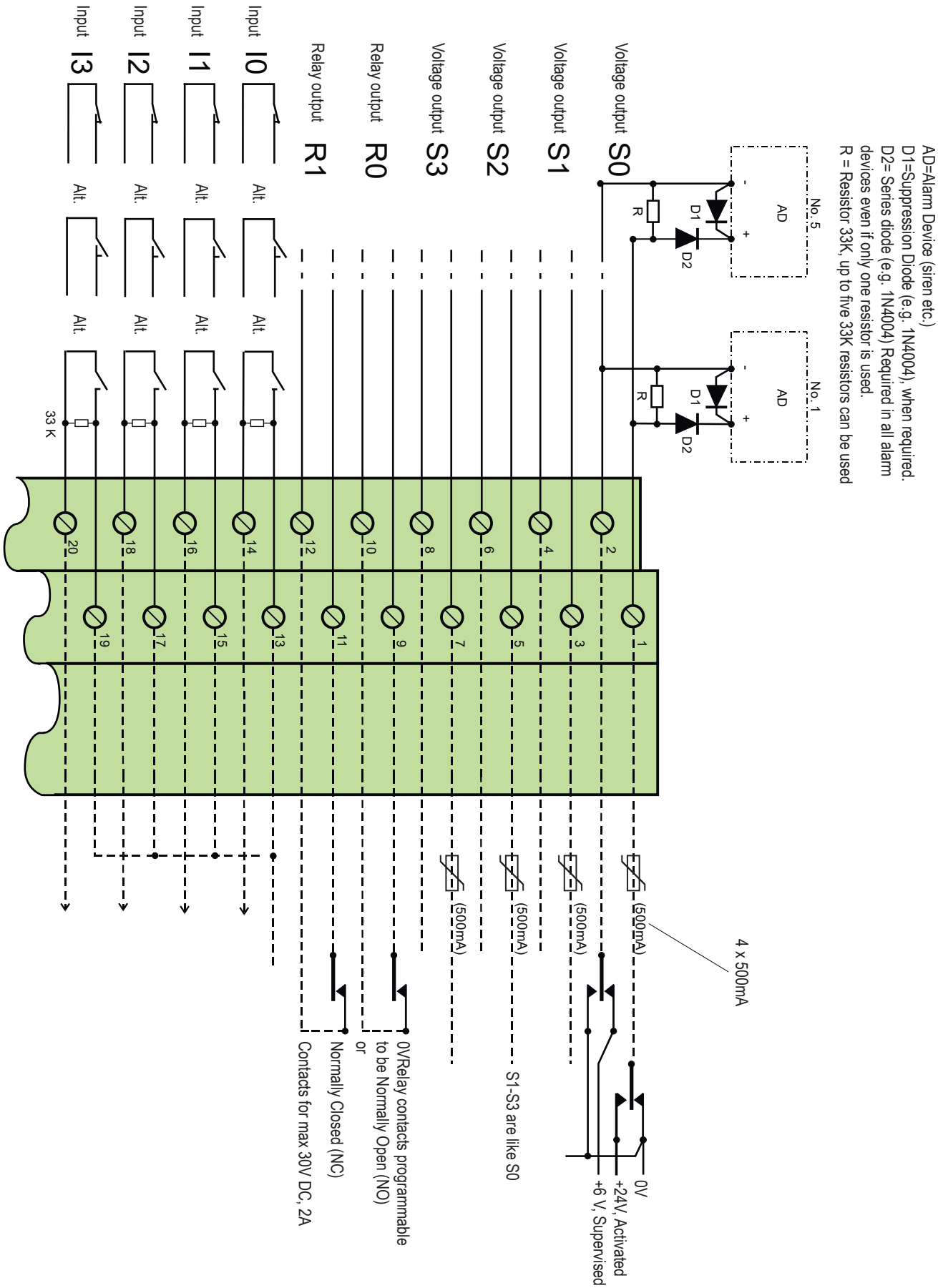

12.3. MAIN BOARD J5

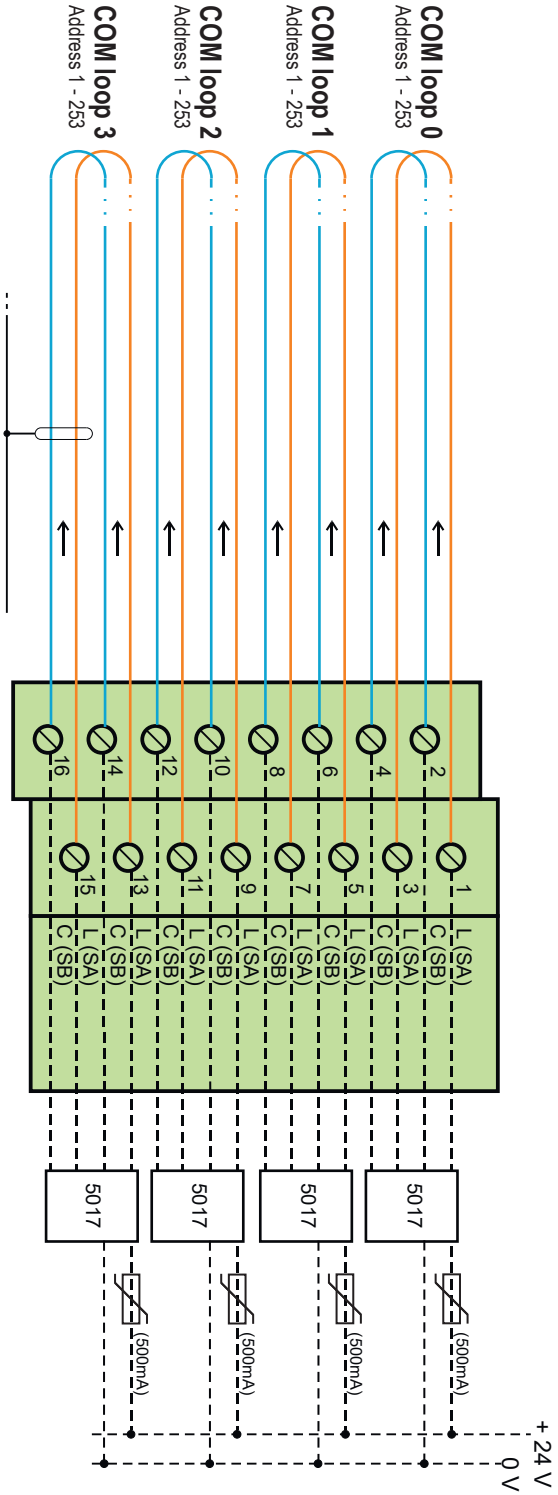

12.4. MAIN BOARD J9

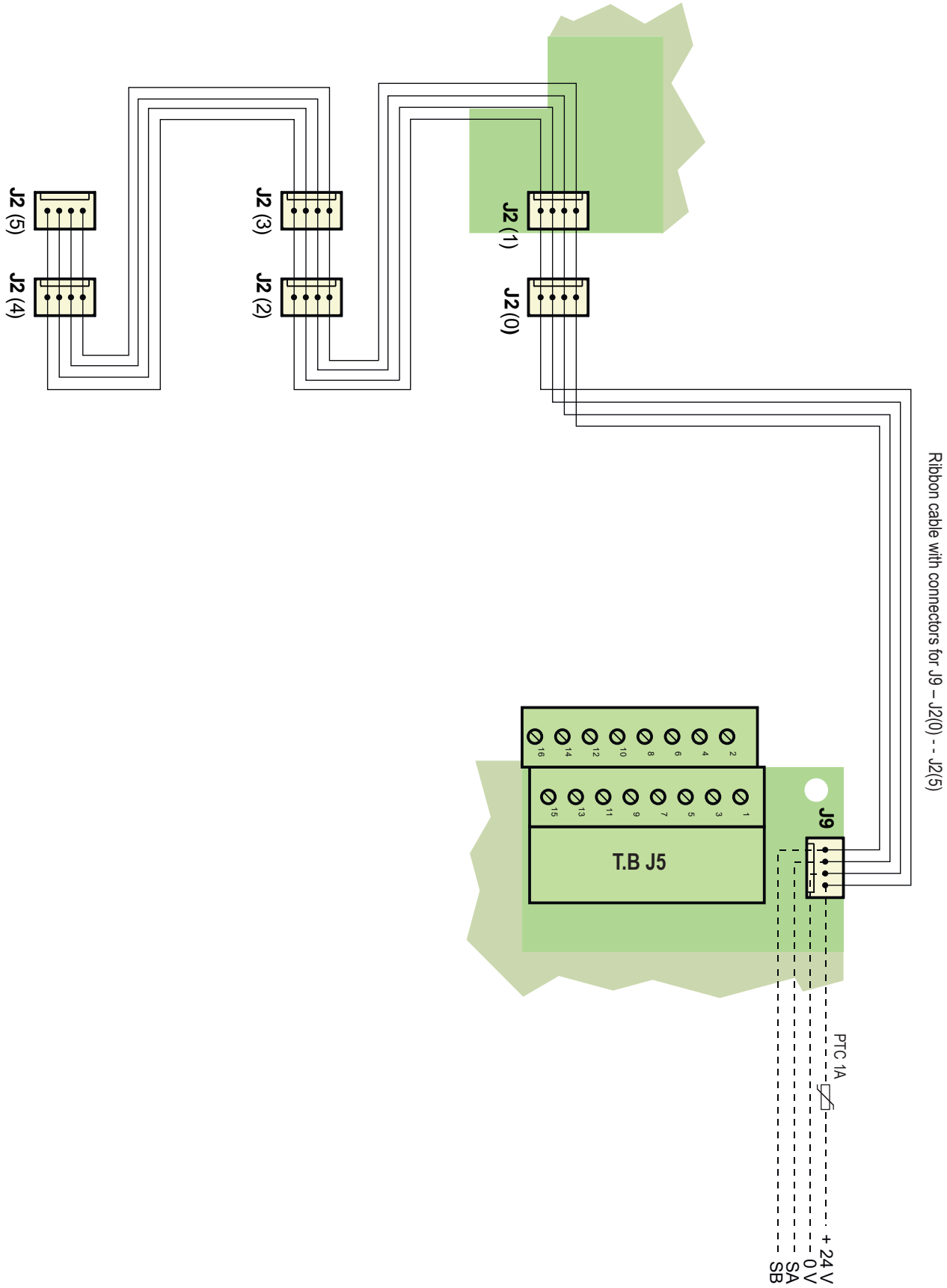

12.5. MAIN BOARD INTERNAL CONNECTION

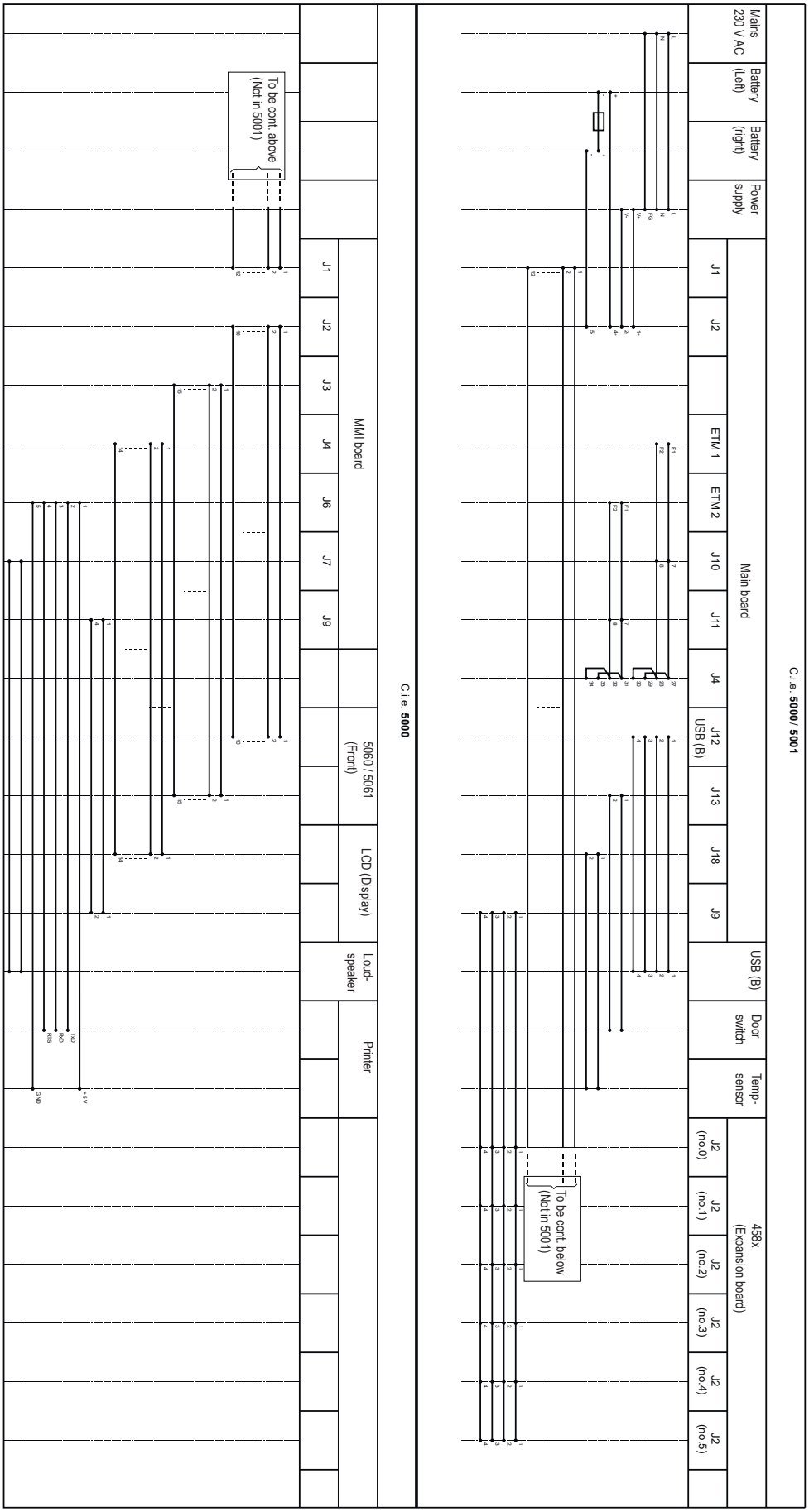

ETM 1 – Connected to optional 5090 TLON connection board no. 0
ETM 2 – Connected to optional 5090 TLON connection board no. 1

12.6. 5040 PRIMARY AND SECONDARY NETWORK

- In each segment either fibre or copper cable can be used. Both cables must not be connected.
- The control unit numbers (a,b,c,d) do not have to be in order but the actual order must be specified in EBLWin (System-Settings)
- The secondary network must be built in such a way that the control unit order is opposite of the primary network

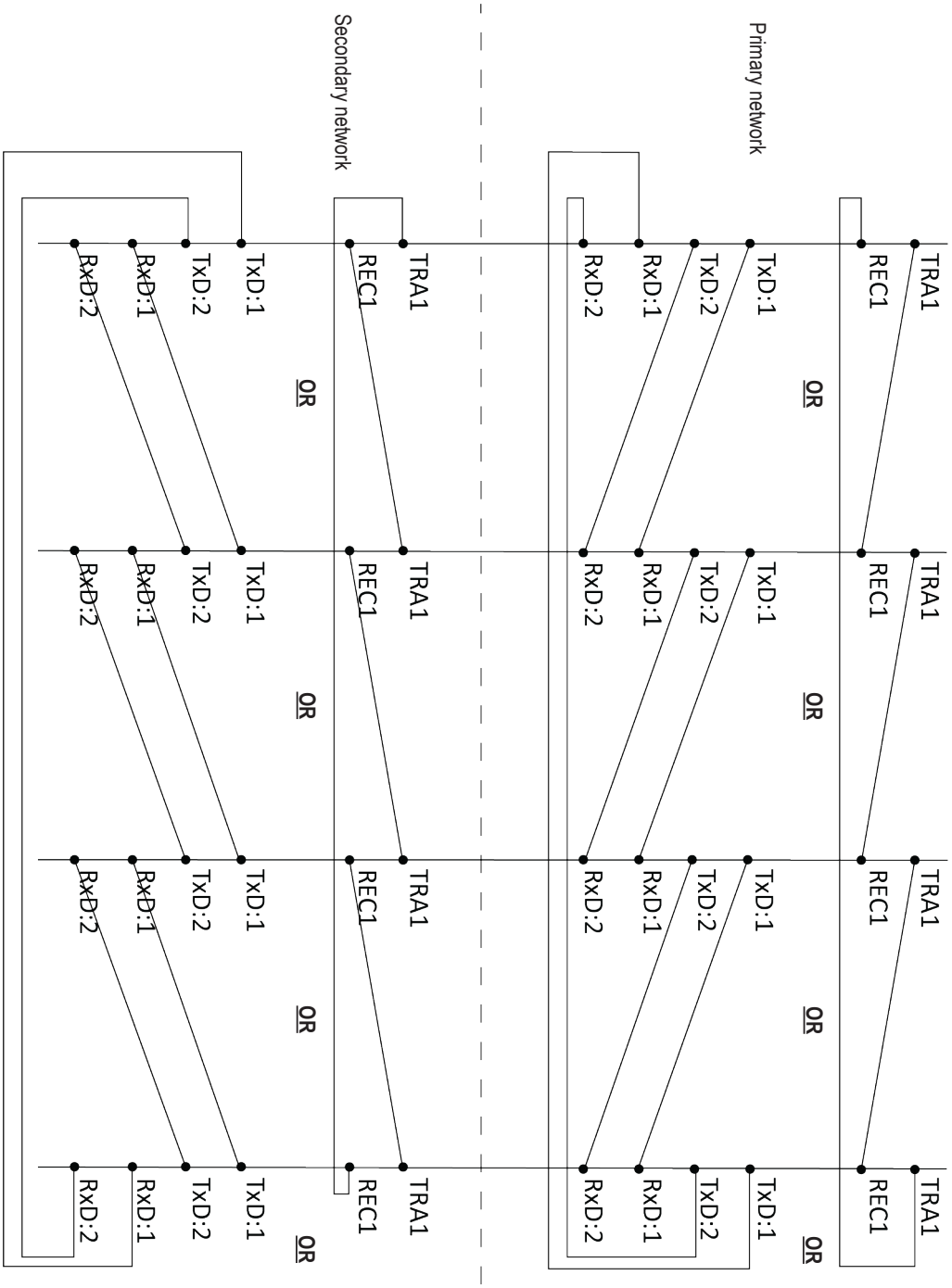

13. APPROVALS

Applicable directive/ Approval	Applicable standards	Notified body
CPR	EN54-2 EN54-4	RISE No. 0402-CPR-C500143 No. 0402-CPR-C500142
EMC	EN 55032 Class A [1] (Emission) EN 50130-4 (Immunity)	Force RISE
LVD	EN IEC 62368-1	Intertek
RoHS	EN IEC 63000	Self declaration

1) **NOTE!** Operation of this equipment in a residential environment could cause radio interference.

DOCUMENT NAME: TECHNICAL DESCRIPTION 5000, 5001
DOCUMENT NUMBER: MEW02399 EN
DATE OF ISSUE: 2019-10-09
REV: 9
DATE OF REVISION: 2026-10-13

Panasonic Fire & Security Europe AB
Jungmansgatan 12
SE-211 11 Malmö
SE
Tel: +46 (0)40 697 70 00